AnMa TECH
For all your bolting needs

Report nr.:	36846543-0520
Serial nr.:	73311581
Tool:	**FE110-3-230V 4 Port**
Ma min:	0
Ma max:	700

Date:	02-06-2020
Technician:	André van Nijnatten
Equipment:	LEO2/700 Bar 8140

Pressure (Bar)	Measured (Bar)	Difference %
0	0	0
100	101	0,1
200	202	0,3
300	303	0,4
400	401	0,1
500	503	0,4
600	605	0,7
700	698	-0,3

Result: Pressure gauge verified within 1% of full scale value

Signature:

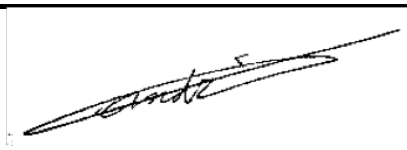

AnMa-TECH BV --- info@anma-tech.nl --- +31 (0) 485 801 476

AnMa TECH
For all your bolting needs

Calibration date:	02-06-2020
Calibration due:	02-06-2021

Tool model:	FE110-3-230V 4 Port
Serial nr.:	73311581

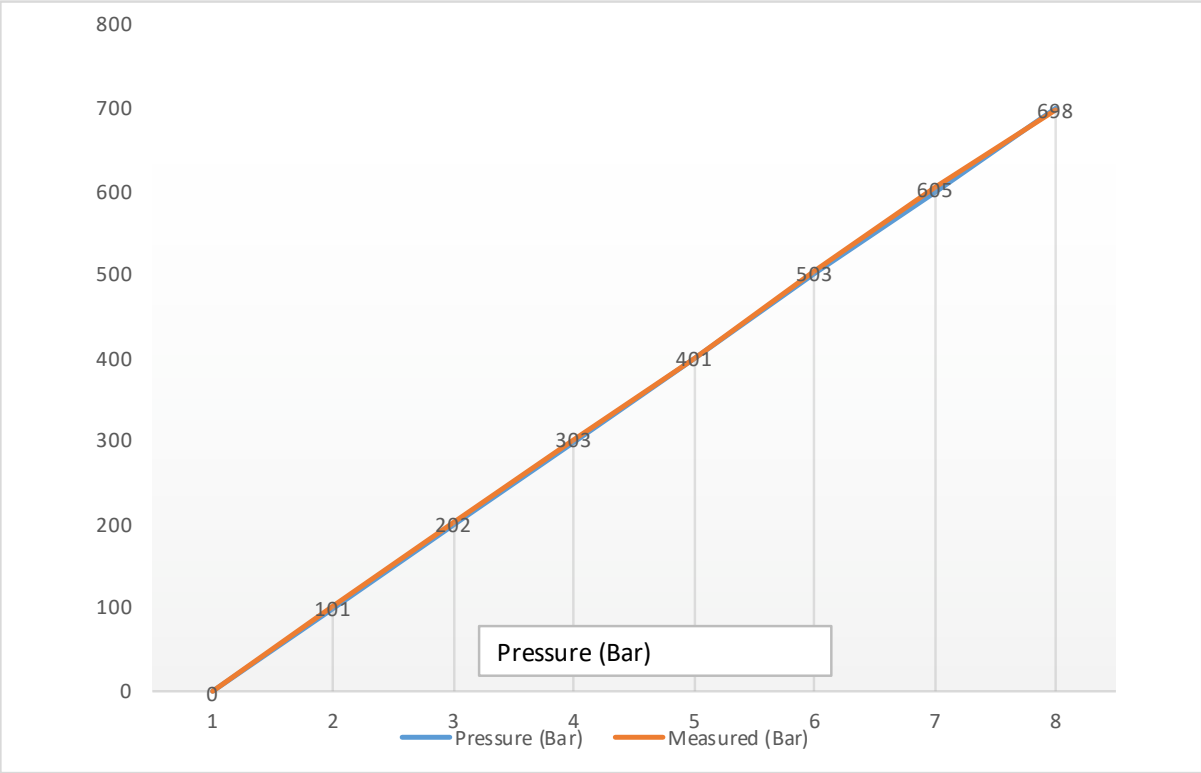

TorsionX Europe

Disclaimer:
AnMa TECH BV does not take liability for any damage caused by observations made or remarks noted on this report.
Every check and/or test is a snap shot.
Performed following ISO/IEC 17025:2017

Stephan Dahlmann
Mechanik und Antriebstechnik GmbH

Beuler Höhe 11, D-45525 Hattingen
Tel. +49(0)2324/55515
info@stephandahlmann.de
www.stephandahlmann.com

Operating Instructions

Contents

		Page
1.	Designation and Illustration of the Machine	1
2.	EC Declaration of Conformity	2
3.	General Description of the Machine	3
4.	Specified Conditions of Use	4
5.	Residual Risks	4
6.	Notes on Transport	4
7.	Use and Conditions for Storage	4
8.	Before Initial Operation	5
9.	Operation	6
9.1	Operating the Machine	6
9.2	Pressure and / or Torque Adjustment	6
9.3	Tightening or Loosening Threaded Connections	6
10.	Servicing and Fault Clearance	7
11.	Shutdown	7
12.	Technical Data	8
13.	Electrical Diagram	9
14.	Hydraulic Diagram	10

1. Designation and Illustration of the Machine

Hydraulic device FE110-3-230V

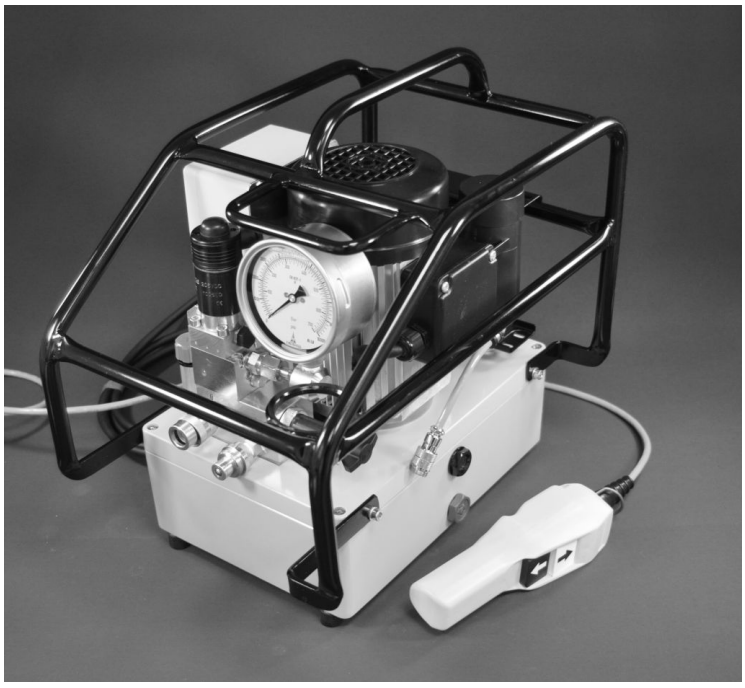

CE

2. EC Declaration of Conformity

EG-Konformitätserklärung nach Maschinenrichtlinie 2006/42/EG Anhang II 1.A

Der Hersteller

Stephan Dahlmann – Mechanik und Antriebstechnik GmbH
Beuler Höhe 11, 45525 Hattingen

erklärt hiermit, dass folgendes Produkt

Produktbezeichnung:	**Hydraulikaggregat**
Serien-/Typenbezeichnung:	FE110-3-230V
Seriennummer:	733xxxx

allen einschlägigen Bestimmungen der oben genannten Richtlinie sowie den weiteren angewandten Richtlinien (nachfolgend) - einschließlich deren zum Zeitpunkt der Erklärung geltenden Änderungen - entspricht.

Folgende weitere EU-Richtlinien wurden angewandt:

EMV-Richtlinie 2004/108/EG

Folgende harmonisierte Normen wurden angewandt:

DIN EN ISO 12100:2011-3	Sicherheit von Maschinen
DIN EN ISO 4413:2011-04	Fluidtechnik - Allgemeine Regeln und sicherheitstechnische Anforderungen an Hydraulikanlagen und deren Bauteile

Name und Anschrift der Person, die bevollmächtigt ist, die technischen Unterlagen zusammenzustellen:

Dipl.-Ing. Stephan Dahlmann
Beuler Höhe 11; 45525 Hattingen

Ort: Hattingen
Datum: 09.05.2012

_____
(Unterschrift)
Dipl.-Ing. Stephan Dahlmann, Geschäftsführer

3. General Description of the Machine

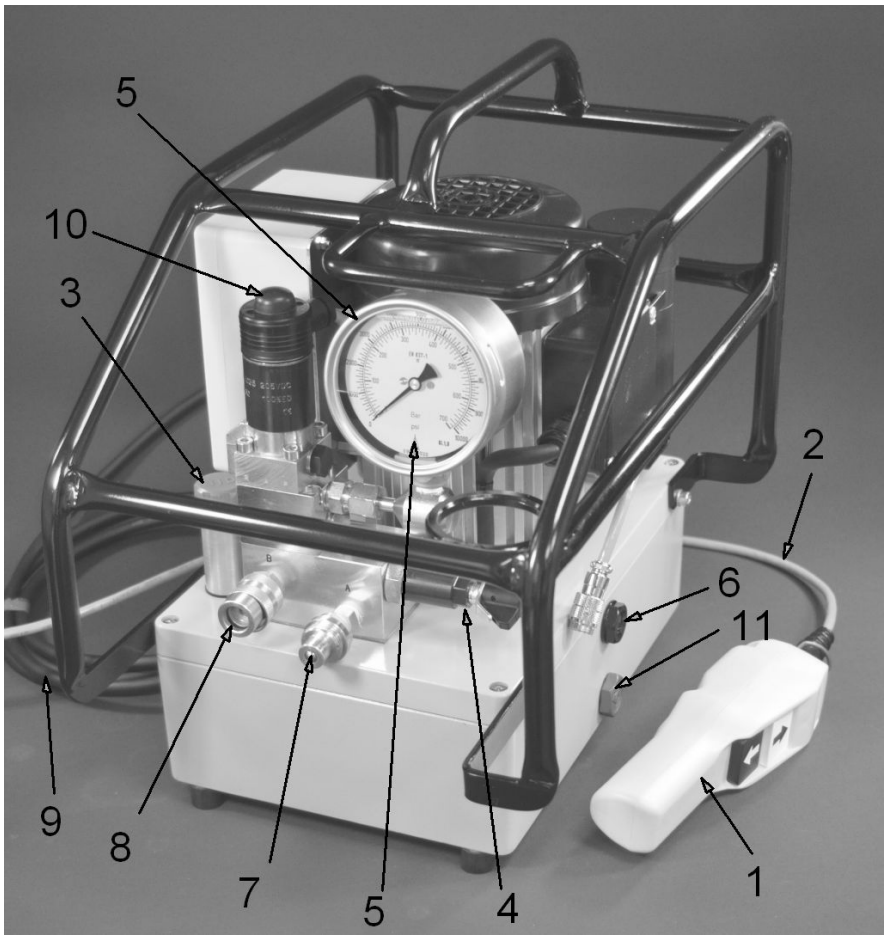

Fig. 1

Components of the Machine:

1	Remote control
2	Remote control cable
3	Hydraulic fluid filler cap
4	Pressure adjustment valve
5	Manometer
6	Fluid level sight glass
7	Hose coupling connection "A"
8	Hose coupling connection "B"
9	Mains cable with mains plug
10	Manual actuation for solenoid valve
11	Fluid drain plug

4. Specified Conditions of Use

This device is exclusively intended for use as a drive mechanism for hydraulic torque tools in line with the description and safety instructions given in these Operating Instructions.

- Any other use is considered to be improper!
- In particular the use of the machine as a drive for all other hydraulic devices such as presses, hoisting cylinders, hydraulic shears, spreaders, etc. is improper use!
- Improper use of the device or modifications to the device undertaken by the end-user exclude any liability on the part of the manufacturer and invalidate the Declaration of Conformity!
- In this case the user is liable for damages resulting from the use of the device.

5. Residual risks

➢ Danger due to hot surfaces: The surface of the oil cooler (if fitted) becomes hot; keep a safe distance; the warning symbol is attached to the cooler

➢ Danger due to noise: maximum noise level 82 dB(A); the end-user must make personal protective equipment (ear-protectors) available.

6. Notes on Transport

- Delivery ex-works Hattingen:
  Packed in corrugated cardboard, on a pallet secured with strapping.
  Other types of packaging only after consultation with the manufacturer.

- Transport of the machine ready for operation:
  a. by hand: up to 30 kg with 1 person
  above 30 kg with two persons

  b. with industrial trucks: use suitable hoisting equipment

  c. suspended: use suitable slings (no chains, no metal ropes)

7. Use and Conditions for Storage

➢ Ambient temperature: -10 to +40°C for use and storage

➢ Protect from rain during use and storage.

➢ Modification of the conditions of use only after consultation with the manufacturer.

➢ Power supply connections: (delivery with earthed pin plug). In the event of modification to the mains connection, protection against shock must be guaranteed by installing a protective earth system.

8. Before Initial Operation

- Carry out a visual inspection before each start-up.
- Check remote control (1), mains plug (9) and all cables for damage.
- Check hose couplings, hoses[1)] and hydraulic torque tools[1)] for damage.

[1)]not included in delivery

- Hose couplings, hoses and hydraulic torque tools must be designed for an operating pressure of 700 bar.
- Hose couplings, hoses and hydraulic torque tools with lower operating pressures are not permitted to be connected to the hydraulic device!
- Check the entire machine, fluid reservoir, motor, manometer and air line lubricator for damage such as ruptures or leaks.
- Have damaged parts replaced by qualified technicians before operation.
- Check hose couplings (7, 8) for dirt.
- Clean soiled hose couplings before operation.
- Check the fluid level; the level must be up to the middle of the oil sight glass (6).
- If need be, top up hydraulic fluid.
- Set up the hydraulic device on a level, horizontal surface so that it is prevented from falling over or falling down.
- Connect the hydraulic device by means of the threaded couplings with the hoses and with the hydraulic torque tool: (as per Fig. 2)
- Power supply connections: (delivery with earthed pin plug). In the event of modification to the mains connection, protection against shock must be guaranteed by installing a protective earth system.

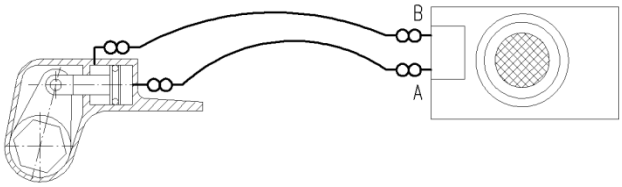

Fig. 2

- The hydraulic device must not be operated without the hoses and the hydraulic torque tool connected up!
- Connect the hydraulic device to the electricity supply.

9. Operation

9.1 Operating the Machine

- Switch on the motor by actuating the white push-button on the remote control (1).
- White push-button actuated: forward stroke of the tool piston
- White push-button not actuated: return stroke of the tool piston
- Switch off the motor by actuating the black push-button on the remote control (1)
- Relieve pressure of the device by manually actuating the solenoid valve (10)

9.2 Pressure and / or Torque Adjustment

The torque of hydraulic torque wrenches is proportional to the pressure.
This is why before tightening or loosening bolted connections the maximum pressure of the machine and thus the maximum torque of the torque tool must be adjusted:

- Do not place the hydraulic tool on either bolts or nuts.
- Switch on the motor by pushing the white push-button on the remote control (1) and keep the white push-button pressed down – the tool piston extends.
- After reaching the end position of the tool piston, the maximum pressure of the system can be increased by turning the adjustment knob (4.1) on the pressure adjustment valve (4) clockwise until the required pressure is reached. The current system pressure is displayed on the manometer (5).
- By releasing the white push-button, the tool piston retracts.

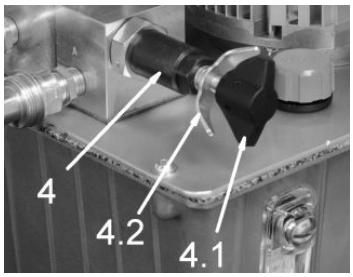

Fig.3

- Checking the setting: after reaching the end position a second time, press the white push-button again in order to extend the tool piston completely and to keep it until the maximum pressure is reached.
- To reduce the maximum pressure, turn the adjustment knob (4.1) on the pressure adjustment valve (4) anti-clockwise.
- When the required pressure is reached, the setting is secured by tightening the wing nut (4.2) on the pressure adjustment valve (4).

9.3 Tightening or loosening threaded connections

Tightening or loosening threaded connections is done according to the instructions of the torque tool manufacturer.

10. Servicing and Fault Clearance

- As a matter of principle, electrical work may only be carried out by qualified electricians.
- Use only original spare parts as per the spare parts list.
- Hydraulic fluid change and filter change (if fitted) at least once every year or at the latest after every 300 operation hours; if necessary earlier, if the hydraulic device is used in a dusty environment.
  - Recommended hydraulic fluids: HLP32 or HLP46
  - Hydraulic fluid quantity : see Technical Data (Section 12)
  - Fluid filter as per spare parts list

Malfunction	**Possible cause**	**Remedy**
Motor does not start	Mains cable not connected	connect Mains cable
	Incorrect mains voltage	Check mains voltage; if necessary connect to suitable electricity supply
	Mains cable faulty Remote control cable faulty Remote control faulty	Have it replaced by qualified electrician
	Machine faulty	Have it serviced by authorised workshop
No (or insufficient) pressure build-up even though motor is running	Too little or no hydraulic fluid	Top up hydraulic fluid
	Maximum pressure not set or set too low	Adjust pressure as per Section 9.2
	Machine faulty	Have it serviced by authorised workshop
Tool does not move even though pressure builds up correctly	One or several hose couplings not tightly connected	Connect up machine, hoses and tool as per Section 8, Fig. 2
Tool works the wrong way round	Tool connected incorrectly	Connect up machine, hoses and tool as per Section 8, Fig. 2

11. Shutdown

- Switch off motor by actuating the black push-button on the remote control (1).
- Release the pressure in the system by pressing and holding down the black push-button and at the same time pressing the white push-button once.
- Disconnect the hydraulic device from the compressed air supply.
- Turn the adjustment knob on the pressure adjustment valve (4) all the way anti-clockwise and thus set the maximum pressure to 0 bar.
- Disconnect the hydraulic device from the hoses.

12. Technical Data

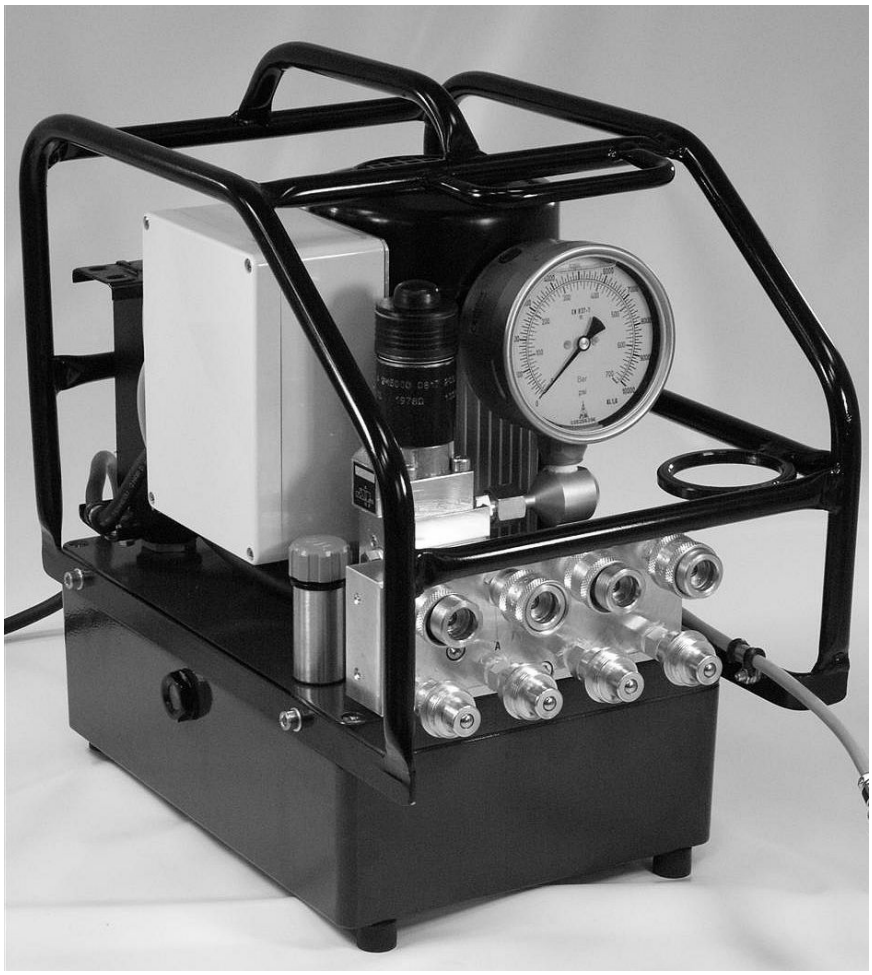

Type **FE110-3-230V**

Technical Data

Voltage	1~230V 50Hz
Nominal power output	1.1 kW
Pump capacity:	
Low pressure < 75 bar	8.5 l/min
Medium pressure 75-220 bar	3.4 l/min
High pressure up to 700bar	1.3 l/min
Weight without/with hydraulic fluid	30.5/34.5 kg
Fluid capacity	4.0 l
Fluids:	HLP32; HLP46
Dimensions:	
Length	46 cm
Width	30 cm
Height	44 cm
Noise level	82 dbA

13. Electrical Diagram

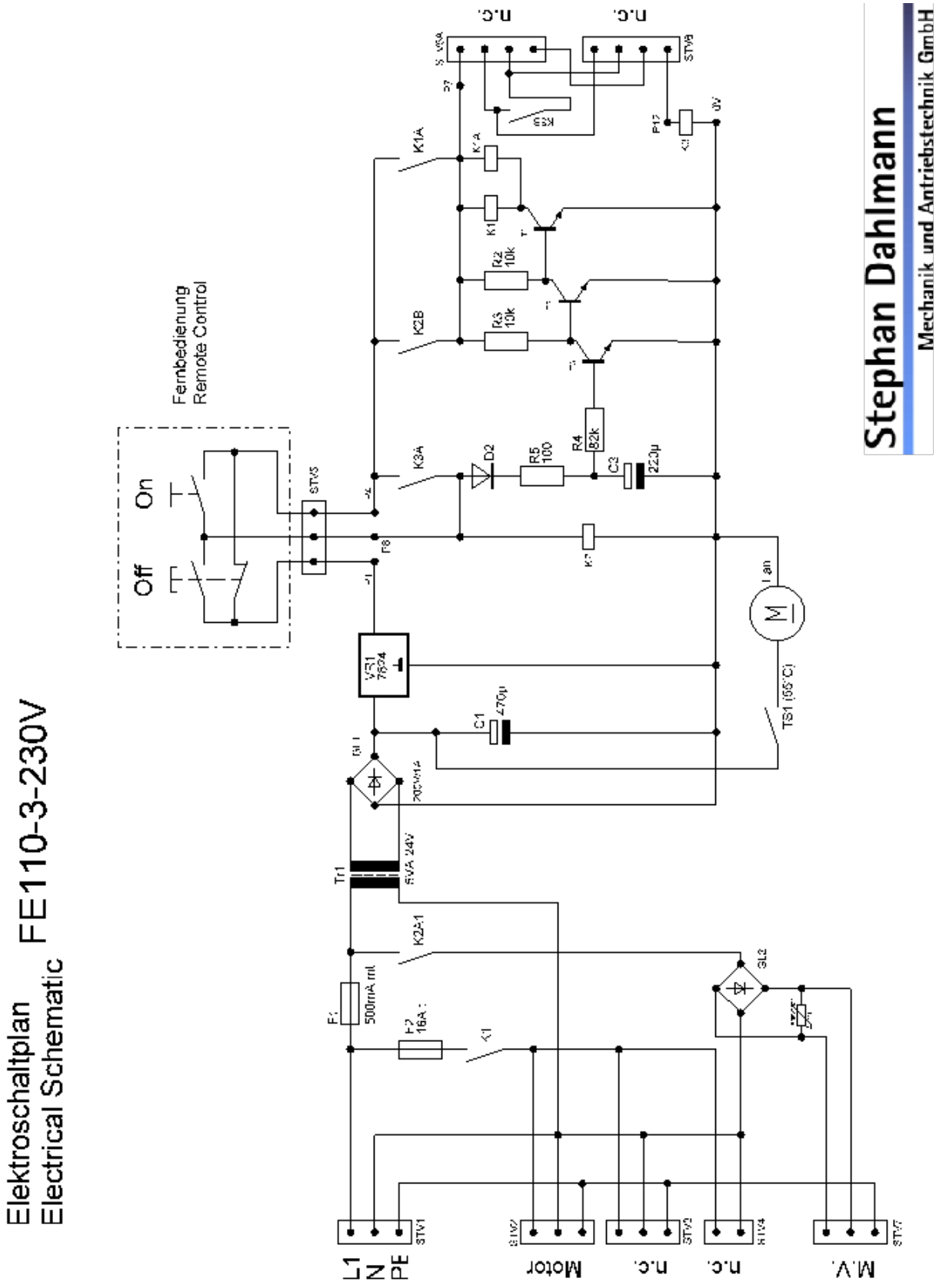

14. Hydraulic Diagram

Hydraulikschaltplan
Hydraulic Schematic

FE110-3-230V

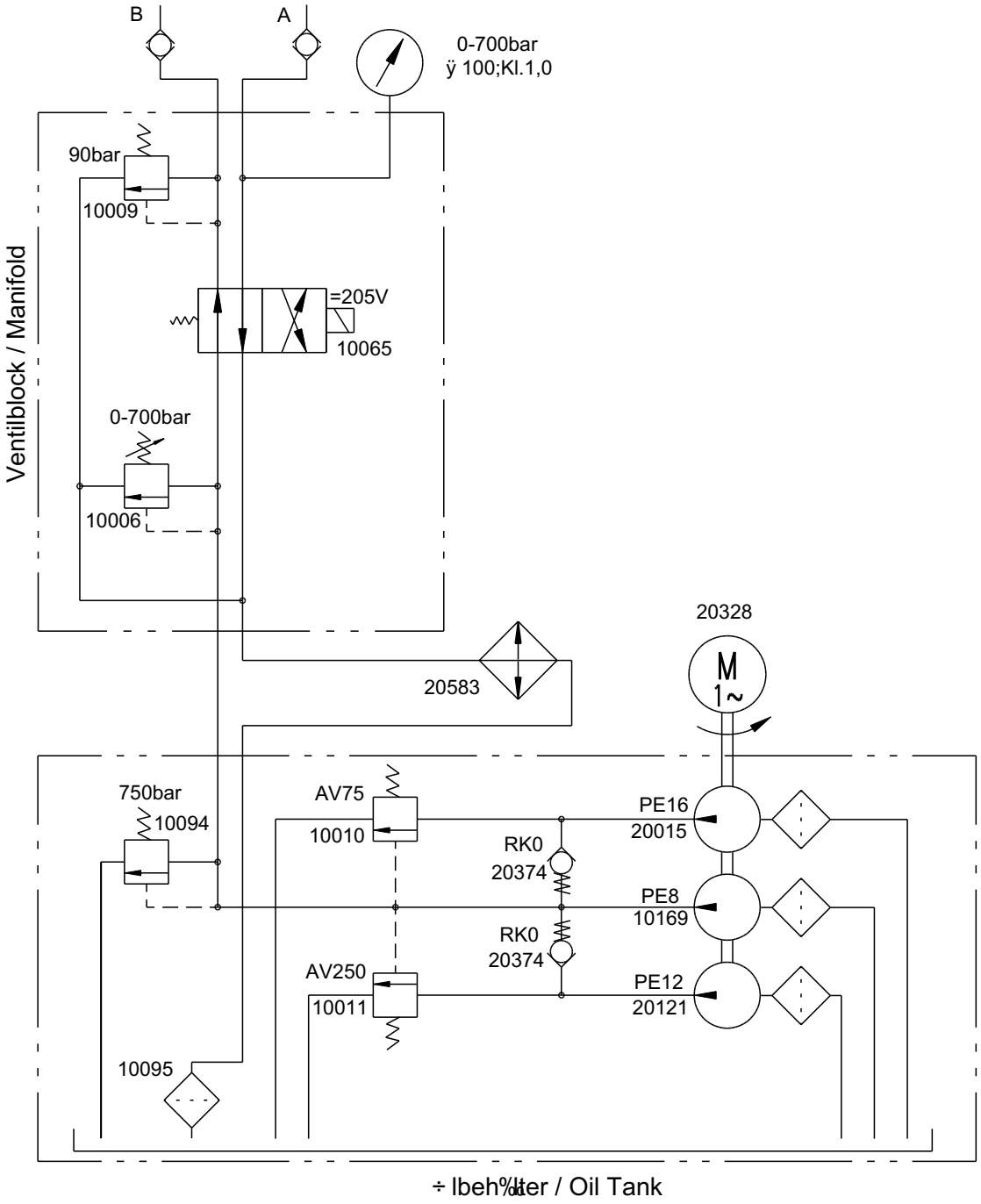

Stand 09.05.2012

Stephan Dahlmann
Mechanik und Antriebstechnik GmbH